DiC TOOLS

A Brand by Dedicated Impex Co.

GAUGES

INDEX...

Product Name	Page No.
Metric Thread Gauges	01
Thread Plug Gauges	02
Plain Plug Gauges	03 - 05
Cylindrical Plug Gauges	06-07
Taperlock Cylindrical Plug Gauges	08
Morse Taper Gauges	09
Taper Plug Gauges	10
Ring Thread Gauges & Setting Plugs	11
Spline Gauges & Spline Ring Gauges	12
Plain Ring Setting Gauges	13
Carbide Ring Gauges	14
Master Setting & Ring Gauges	15
Adjustable Snap Gauges	16-19
Snap Gauges for Undercuts	20
Doubled Ended Snap Gauges	21
Metric Trapezoidal Thread Gauges	22
Slip Gauges (Individual & Boxed Slips)	23
Measuring Pins	24
Air Plug Gauges	25
Air Ring Gauges & Setting Plug	26
Master Setting Disc	27
Taper Mandrel	28

Metric Thread Gauges

Standard Pitch Diameter Chart

NOMINAL SIZE & PITCH	FOR EXTERNAL THREAD				FOR INTERNAL THREAD			
	PITCH DIAMETER GO RING GAGE 6g TOLERANCE		PITCH DIAMETER NOT GO RING GAGE 6g TOLERANCE		PITCH DIAMETER GO PLUG GAGE 6H TOLERANCE		PITCH DIAMETER NOT GO PLUG GAGE 6H TOLERANCE	
	MM	IN. (REF)	MM	IN. (REF)	MM	IN. (REF)	MM	IN. (REF)
M 1.6 X 0.35	1.354	.05331	1.291	.05083	1.373	.05406	1.458	.05740
M 2 X 0.4	1.721	.06776	1.654	.06512	1.740	.06850	1.830	.07205
M 2.5 X 0.45	2.188	.08614	2.117	.08335	2.208	.08693	2.303	.09067
M 3 X 0.5	2.655	.10453	2.580	.10157	2.675	.10531	2.775	.10925
M 3.5 X 0.6	3.089	.12161	3.004	.11827	3.110	.12244	3.222	.12685
M 4 X 0.7	3.523	.13870	3.433	.13516	3.545	.13957	3.663	.14421
M 5 X 0.8	4.456	.17543	4.361	.17169	4.480	.17638	4.605	.18130
M 6 X 1.0	5.324	.20961	5.212	.20520	5.350	.21063	5.500	.21654
M 8 X 1.25	7.160	.28189	7.042	.27724	7.188	.28299	7.348	.28929
M 8 X 1.0	7.324	.28835	7.212	.28394	7.350	.28937	7.500	.29528
M 10 X 1.5	8.994	.35409	8.862	.34890	9.026	.35535	9.206	.36244
M 10 X 1.25	9.160	.36063	9.042	.35598	9.188	.36173	9.348	.36803
M 10 X 1.0	9.324	.36709	9.212	.36268	9.350	.36811	9.500	.37402
M 10 X 0.75	9.491	.37366	9.391	.36972	9.513	.37453	9.645	.37972
M 12 X 1.75	10.829	.42634	10.679	.42043	10.863	.42768	11.063	.43555
M 12 X 1.5	10.994	.43283	10.854	.42732	11.026	.43409	11.216	.44157
M 12 X 1.25	11.160	.43937	11.028	.43417	11.188	.44047	11.368	.44756
M 12 X 1.0	11.324	.44583	11.206	.44118	11.350	.44685	11.510	.45315
M 14 X 2.0	12.663	.49854	12.503	.49224	12.701	.50004	12.913	.50839
M 14 X 1.5	12.994	.51157	12.854	.50606	13.026	.51283	13.216	.52031
M 15 X 1.0	14.324	.56394	14.206	.55929	14.350	.56496	14.510	.57126
M 16 X 2.0	14.663	.57728	14.503	.57098	14.701	.57878	14.913	.58713
M 16 X 1.5	14.994	.59031	14.854	.58480	15.026	.59157	15.216	.59906
M 17 X 1.0	16.324	.64268	16.206	.63803	16.350	.64370	16.510	.65000
M 18 X 1.5	16.994	.66906	16.854	.66354	17.026	.67031	17.216	.67780
M 20 X 2.5	18.334	.72181	18.164	.71512	18.376	.72346	18.600	.73228
M 20 X 1.5	18.994	.74780	18.854	.74228	19.026	.74906	19.216	.75654
M 20 X 1.0	19.324	.76079	19.206	.75614	19.350	.76181	19.510	.76811
M 22 X 2.5	20.334	.80055	20.164	.79386	20.376	.80220	20.600	.81102
M 22 X 1.5	20.994	.82654	20.854	.82102	21.026	.82780	21.216	.83528
M 24 X 3.0	22.003	.86626	21.803	.85839	22.051	.86815	22.316	.87858
M 24 X 2.0	22.663	.89224	22.493	.88555	22.701	.89374	22.925	.90256
M 25 X 1.5	23.994	.94465	23.844	.93874	24.026	.94591	24.226	.95378
M 27 X 3.0	25.003	.98437	24.803	.97650	25.051	.98626	25.316	.99669
M 27 X 2.0	25.663	1.01035	25.493	1.00366	25.701	1.01185	25.925	1.02067
M 30 X 3.5	27.674	1.08953	27.642	1.08118	27.727	1.09161	28.007	1.10264
M 30 X 2.0	28.663	1.12846	28.493	1.12177	28.701	1.12996	28.925	1.13878
M 30 X 1.5	28.994	1.14150	28.844	1.13559	29.026	1.14276	29.226	1.15063
M 33 X 2.0	31.663	1.24657	31.493	1.23988	31.701	1.24807	31.925	1.25689
M 35 X 1.5	33.994	1.33835	33.844	1.33244	34.026	1.33961	34.226	1.34748
M 36 X 4.0	33.342	1.31268	33.118	1.30386	33.402	1.31504	33.702	1.32685
M 36 X 2.0	34.663	1.36469	34.493	1.35799	34.701	1.36618	34.925	1.37500
M 39 X 2.0	37.663	1.48280	37.493	1.47610	37.701	1.48429	37.925	1.49311

Thread Plug Gauges

NOMINAL SIZE	GO BASIC ALL CLASSES ALL SERIES	UNIFIED PITCH DIAMETERS				
		NO GO		X TOL. GO =+ NO GO =–	X LEAD TOL.	X ± HALF ANGLE TOL.
		CLASS 2	CLASS 3B			
#0-80 UNF	.0519	.0542	.0536	.0002	.0002	0°30'
#1-64 UNC	.0629	.0655	.0648	.0002	.0002	0°30'
#1-72 UNF	.0640	.0665	.0659	.0002	.0002	0°30'
#2-56 UNC	.0744	.0772	.0765	.0002	.0002	0°30'
#2-64 UNF	.0759	.0786	.0779	.0002	.0002	0°30'
#3-48 UNC	.0855	.0885	.0877	.0002	.0002	0°30'
#3-56 UNF	.0874	.0902	.0895	.0002	.0002	0°30'
#4-40 UNC	.0958	.0991	.0982	.0002	.0002	0°20'
#4-48 UNF	.0985	.1016	.1008	.0002	.0002	0°30'
#5-40 UNC	.1088	.1121	.1113	.0002	.0002	0°20'
#5-44 UNF	.1102	.1134	.1126	.0002	.0002	0°20'
#6-32 UNC	.1177	.1214	.1204	.0003	.0003	0°15'
#6-40 UNF	.1218	.1252	.1243	.0002	.0002	0°20'
#8-32 UNC	.1437	.1475	.1465	.0003	.0003	0°15'
#8-36 UNF	.1460	.1496	.1487	.0002	.0002	0°20'
#10-24 UNC	.1629	.1672	.1661	.0003	.0003	0°15'
#10-32 UNF	.1697	.1736	.1726	.0003	.0003	0°15'
#12-24 UNC	.1889	.1933	.1922	.0003	.0003	0°15'
#12-28 UNF	.1928	.1970	.1959	.0003	.0003	0°15'
#12-32 UNEF	.1957	.1998	.1988	.0003	.0003	0°15'
¼-20 UNC	.2175	.2224	.2211	.0003	.0003	0°15'
¼-28 UNF	.2268	.2311	.2300	.0003	.0003	0°15'
¼-32 UNEF	.2297	.2339	.2328	.0003	.0003	0°15'
5/16-18 UNC	.2764	.2817	.2803	.0003	.0003	0°10'
5/16-24 UNF	.2854	.2902	.2890	.0003	.0003	0°15'
5/16-32 UNEF	.2922	.2964	.2953	.0003	.0003	0°15'
⅜-16 UNC	.3344	.3401	.3387	.0003	.0003	0°10'
⅜-24 UNF	.3479	.3528	.3516	.0003	.0003	0°15'
⅜-32 UNEF	.3547	.3591	.3580	.0003	.0003	0°15'
7/16-14 UNC	.3911	.3972	.3957	.0003	.0003	0°10'
7/16-20 UNF	.4050	.4104	.4091	.0003	.0003	0°15'
7/16-28 UNEF	.4143	.4189	.4178	.0003	.0003	0°15'
½-13 UNC	.4500	.4565	.4548	.0003	.0003	0°10'
½-20 UNF	.4675	.4731	.4717	.0003	.0003	0°15'
½-28 UNEF	.4768	.4816	.4804	.0003	.0003	0°15'
9/16-12 UNC	.5084	.5152	.5135	.0003	.0003	0°10'
9/16-18 UNF	.5264	.5323	.5308	.0003	.0003	0°10'

NOMINAL SIZE	GO BASIC ALL CLASSES ALL SERIES	UNIFIED PITCH DIAMETERS				
		NO GO		X TOL. GO =+ NO GO =–	X LEAD TOL.	X ± HALF ANGLE TOL.
		CLASS 2B	CLASS 3B			
9/16-24 UNEF	.5354	.5405	.5392	.0003	.0003	0°15'
⅝-11 UNC	.5660	.5732	.5714	.0003	.0003	0°10'
⅝-18 UNF	.5889	.5949	.5934	.0003	.0003	0°10'
⅝-24 UNEF	.5979	.6031	.6018	.0003	.0003	0°15'
11/16-24 UNEF	.6604	.6656	.6643	.0003	.0003	0°15'
¾-10 UNC	.6850	.6927	.6907	.0003	.0003	0°10'
¾-16 UNF	.7094	.7159	.7143	.0003	.0003	0°10'
¾-20 UNEF	.7175	.7232	.7218	.0003	.0003	0°15'
13/16-20 UNEF	.7800	.7857	.7843	.0003	.0003	0°15'
⅞-9 UNC	.8028	.8110	.8089	.0003	.0003	0°10'
⅞-14 UNF	.8286	.8356	.8339	.0003	.0003	0°10'
⅞-20 UNEF	.8425	.8482	.8468	.0003	.0003	0°15'
15/16-20 UNEF	.9050	.9109	.9094	.0003	.0003	0°15'
1"-8 UNC	.9188	.9276	.9254	.0004	.0004	0°05'
1"-12 UNF	.9459	.9535	.9516	.0003	.0003	0°10'
1"-14 UNS	.9536	.9609	.9590	.0003	.0003	0°10'
1"-20 UNEF	.9675	.9734	.9719	.0003	.0003	0°15'
1 1/16-12 UN	1.0084	1.0158	1.0139	.0003	.0003	0°10'
1 1/16-18 UNEF	1.0264	1.0326	1.0310	.0003	.0003	0°10'
1⅛-7 UNC	1.0322	1.0416	1.0393	.0004	.0004	0°05'
1⅛-12 UNF	1.0709	1.0787	1.0768	.0003	.0003	0°10'
1⅛-18 UNEF	1.0889	1.0951	1.0935	.0003	.0003	0°10'
1 3/16-12 UN	1.1334	1.1409	1.1390	.0003	.0003	0°10'
1 3/16-18 UNEF	1.1514	1.1577	1.1561	.0003	.0003	0°10'
1¼-7 UNC	1.1572	1.1668	1.1644	.0004	.0004	0°05'
1¼-12 UNF	1.1959	1.2039	1.2019	.0003	.0003	0°10'
1¼-18 UNEF	1.2139	1.2202	1.2186	.0003	.0003	0°10'
1 5/16-12 UN	1.2584	1.2659	1.2640	.0003	.0003	0°10'
1 5/16-18 UNEF	1.2764	1.2827	1.2811	.0003	.0003	0°10'
1⅜-6 UNC	1.2667	1.2771	1.2745	.0004	.0004	0°05'
1⅜-12 UNF	1.3209	1.3291	1.3270	.0003	.0003	0°10'
1⅜-18 UNEF	1.3389	1.3452	1.3436	.0003	.0003	0°10'
1 7/16-12 UN	1.3834	1.3910	1.3891	.0003	.0003	0°10'
1 7/16-18 UNEF	1.4014	1.4079	1.4062	.0003	.0003	0°10'
1½-6 UNC	1.3917	1.4022	1.3996	.0004	.0004	0°05'
1½-12 UNF	1.4459	1.4542	1.4522	.0003	.0003	0°10'
1½-18 UNEF	1.4639	1.4704	1.4687	.0003	.0003	0°10'

Plain Plug Gauges

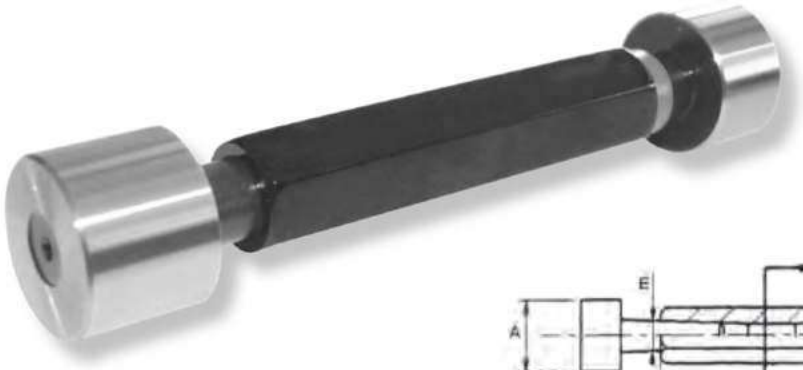

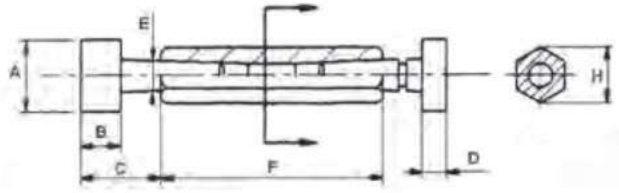

A From	A to	B	C	D	E	F	H
Ø 1	Ø 3	6,5	15	4	2.5	48	6,8
Ø 3	Ø 4	8	16	5	2.5	48	7,6
Ø 4	Ø 6	8	17	5	4	48	7,6
Ø 6	Ø 10	10	19	6.5	5.5	56	10
Ø 10	Ø 14	10	20	8	7	63	12,3
Ø 14	Ø 18	12	23	8	9	70	15,7
Ø 18	Ø 24	16	28	12	12	80	19,4
Ø 24	Ø 33	20	33	16	12	80	19,4
Ø 33	Ø 40	21	33	16	16	90	26,7
Ø 40	Ø 50	25	42	20	16	90	26,7

Plain Plug Gauges

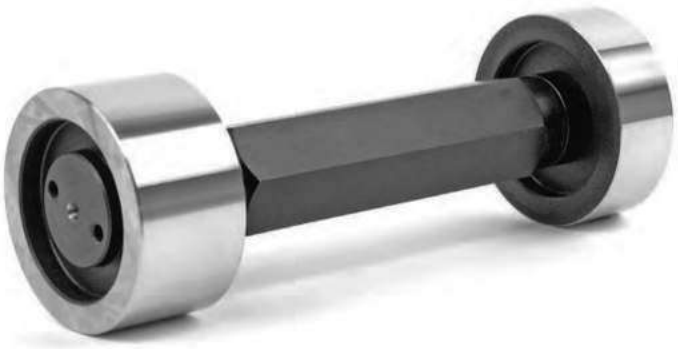

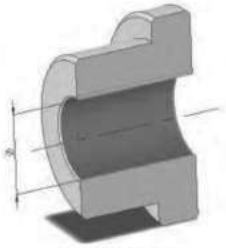

Above 50 mm

A From	A To	B	D	F	H
Ø 50	Ø 75	30	20	124	30,8
Greater than Ø 75 mm		30	20	124	30,8

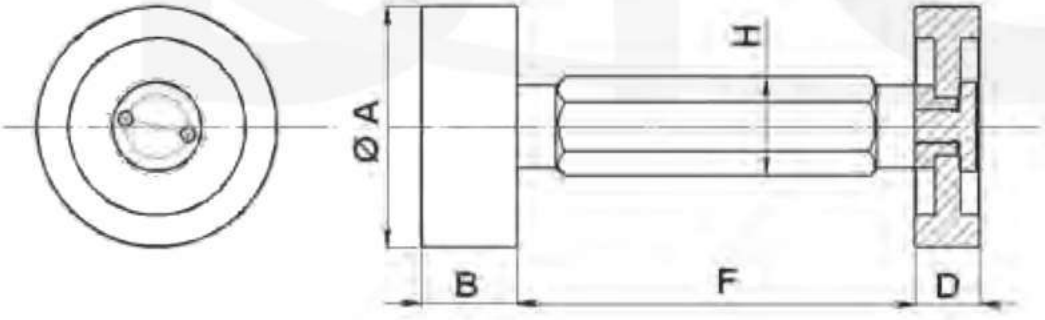

Plain Plug Gauges

A from	A to	B	C
up to 15 mm		16	90
Ø 2,5	Ø 5	10	22
Ø 15	Ø 50	30	100
Ø 50	Ø 100	30	105

A from	A to	B	C H13
Ø 50	Ø 80	18	Ø 20
Ø 80	Ø 125	20	Ø 20
Ø 125	Ø 180	25	Ø 20
Ø 180	Ø 250	25	Ø 25
Ø 250	Ø 300	30	Ø 30

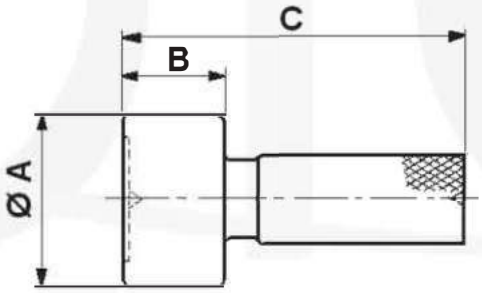

Cylindrical Plug Gauges

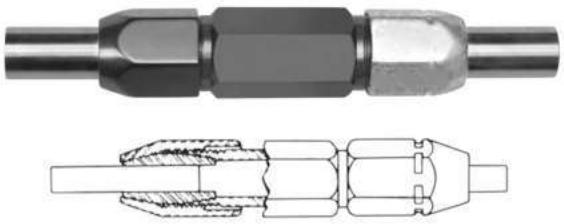

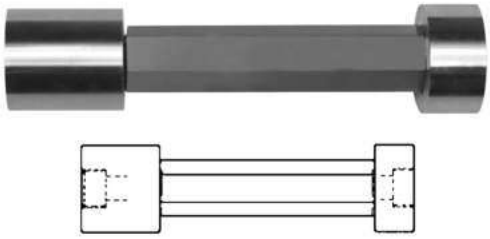

Reversible Style

SIZE ABOVE – INCLUDING	CLASS	TOL.	GO OR NO GO LENGTH	HANDLE #
	XX	.00002		1W
.010 to .075	X	.00004	2"	1W
.254mm to	Y	.00007		1W
1.91mm	Z	.00010		1W
	XX	.00002		2W
.075 to .180	X	.00004	2"	2W
1.91mm to	Y	.00007		2W
4.57mm	Z	.00010		2W
	XX	.00002		3W
.180 to .281	X	.00004	2"	3W
4.57mm to	Y	.00007		3W
7.14mm	Z	.00010		3W
	XX	.00002		4W
.281 to .406	X	.00004	2"	4W
7.14mm to	Y	.00007		4W
10.31mm	Z	.00010		4W
	XX	.00002		5W
.406 to .510	X	.00004	2"	5W
10.31mm to	Y	.00007		5W
12.95mm	Z	.00010		5W
	XX	.00002		6W
.510 to .635	X	.00004	2"	6W
12.95mm to	Y	.00007		6W
16.13mm	Z	.00010		6W
	XX	.00002		7W
.635 to .760	X	.00004	2"	7W
16.13mm to	Y	.00007		7W
19.30mm	Z	.00010		7W
	XX	.00002		8W
.760 to .825	X	.00004	2"	8W
19.30mm to	Y	.00007		8W
20.96mm	Z	.00010		8W
	XX	.00003		8W
.825 to 1.010	X	.00006	2"	8W
20.96mm to	Y	.00009		8W
25.65mm	Z	.00012		8W

Trilock Style

SIZE ABOVE – INCLUDING	CLASS	TOL.	GO LENGTH	NO GO LENGTH	HANDLE #
	XX	.00003			2-1/2
.760 to .947	X	.00006	1-1/4"	3/4"	2-1/2
19.30mm to	Y	.00009			2-1/2
24.05mm	Z	.00012			2-1/2
	XX	.00003			3-1/2
.947 to 1.135	X	.00006	1-3/8"	3/4"	3-1/2
24.05mm to	Y	.00009			3-1/2
28.83mm	Z	.00012			3-1/2
	XX	.00003			4-1/2
1.135 to 1.510	X	.00006	1-1/2"	3/4"	4-1/2
28.83mm to	Y	.00009			4-1/2
38.35mm	Z	.00012			4-1/2
	XX	.00004			5-1/2
1.510 to 2.010	X	.00008	1-7/8"	7/8"	5-1/2
38.35mm to	Y	.00012			5-1/2
51.05mm	Z	.00016			5-1/2
	XX	.00004			6
2.010 to 2.510	X	.00008	2"	7/8"	6
51.05mm to	Y	.00012			6
63.75mm	Z	.00016			6
	XX	.00005			7
2.510 to 3.510	X	.00010	2"	1"	7
63.75mm to	Y	.00015			7
89.15mm	Z	.00020			7
	XX	.00005			7
3.510 to 4.510	X	.00010	2-1/8"	1"	7
89.15mm to	Y	.00015			7
114.55mm	Z	.00020			7
	XX	.000065			7
4.510 to 6.510	X	.00013	2-1/8"	1"	7
114.55mm to	Y	.00019			7
165.35mm	Z	.00025			7
	XX	.00008			7
6.510 to 8.010	X	.00016	2-1/8"	1"	7
165.35mm to	Y	.00024			7
203.45mm	Z	.00032			7

Cylindrical Plug Gauges

Taperlock Style

SIZE ABOVE - INCLUDING	CLASS	TOL.	MEMBER LENGTH	GO PORTION	NO GO PORTION	HANDLE #
.105 to .150 2.67mm to 3.81mm	XX	.00002	23/32"	3/8"	7/32"	00
	X	.00004				00
	Y	.00007				00
	Z	.00010				00
.150 to .230 3.81mm to 5.84mm	XX	.00002	13/16"	13/32"	9/32"	0
	X	.00004				0
	Y	.00007				0
	Z	.00010				0
.230 to .365 5.84mm to 9.27mm	XX	.00002	1-3/16"	3/4"	5/16"	1
	X	.00004				1
	Y	.00007				1
	Z	.00010				1
.365 to .510 9.27mm to 12.95mm	XX	.00002	1-1/2"	1"	3/8"	2
	X	.00004				2
	Y	.00007				2
	Z	.00010				2
.510 to .825 12.95mm to 20.96mm	XX	.00002	1-7/8"	1-1/4"	1/2"	3
	X	.00004				3
	Y	.00007				3
	Z	.00010				3
.825 to 1.135 20.96mm to 28.83mm	XX	.00003	2-1/8"	1-3/8"	5/8"	4
	X	.00006				4
	Y	.00009				4
	Z	.00012				4
1.135 to 1.510 28.83mm to 38.35mm	XX	.00003	2-3/8"	1-1/2"	3/4"	5
	X	.00006				5
	Y	.00009				5
	Z	.00012				5

Trilock Style

SIZE ABOVE - INCLUDING	CLASS	TOL.	MEMBER LENGTH	GO PORTION	NO GO PORTION	HANDLE #
1.510 to 2.010 38.35mm to 51.05mm	XX	.00004	2-7/8"	1-7/8"	7/8"	5-1/2
	X	.00008				5-1/2
	Y	.00012				5-1/2
	Z	.00016				5-1/2
2.010 to 2.510 51.05mm to 63.75mm	XX	.00004	3"	2"	7/8"	6
	X	.00008				6
	Y	.00012				6
	Z	.00016				6
2.510 to 3.510 63.75mm to 89.15mm	XX	.00005	3"	2"	7/8"	7
	X	.00010				7
	Y	.00015				7
	Z	.00020				7
3.510 to 4.510 89.15mm to 114.55mm	XX	.00005	3-1/8"	2-1/8"	7/8"	7
	X	.00010				7
	Y	.00015				7
	Z	.00020				7

Taperlock Cylindrical Plug Gauges

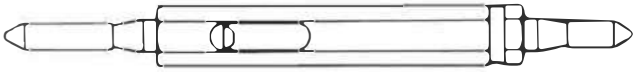

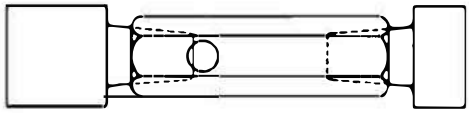

SIZE ABOVE - INCLUDING	CLASS	TOL.	GO LENGTH	NO GO LENGTH	HANDLE #
.059 to .105 1.50mm to 2.67mm	XX	.00002	3/8"	3/16"	000
	X	.00004			000
	Y	.00007			000
	Z	.00010			000
.105 to .150 2.67mm to 3.81mm	XX	.00002	3/8"	7/32"	00
	X	.00004			00
	Y	.00007			00
	Z	.00010			00
.150 to .230 3.81mm to 5.84mm	XX	.00002	13/32"	9/32"	0
	X	.00004			0
	Y	.00007			0
	Z	.00010			0
.230 to .365 5.84mm to 9.27mm	XX	.00002	3/4"	5/16"	1
	X	.00004			1
	Y	.00007			1
	Z	.00010			1
.365 to .510 9.27mm to 12.95mm	XX	.00002	1"	3/8"	2
	X	.00004			2
	Y	.00007			2
	Z	.00010			2
.510 to .825 12.95mm to 20.96mm	XX	.00002	1-1/4"	1/2"	3
	X	.00004			3
	Y	.00007			3
	Z	.00010			3
.825 to 1.135 20.96mm to 28.83mm	XX	.00003	1-1/2"	5/8"	4
	X	.00006			4
	Y	.00009			4
	Z	.00012			4
1.135 to 1.510 28.83mm to 38.35mm	XX	.00003	1-5/8"	3/4"	5
	X	.00006			5
	Y	.00009			5
	Z	.00012			5

Morse Taper Gauges

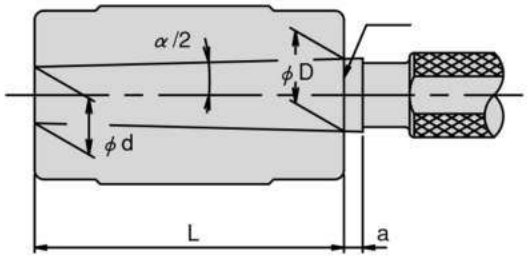

Basic size

Morse taper No.	Taper		Half angle of taper angle	(mm) Size of tapered portion			
		Decimal reduced value		D	d	L	a
MT 0	1/19.212	0.052050	1°29'27"	9.045	6.442	50	3
MT 1	1/20.047	0.049882	1°25'43"	12.065	9.396	53.5	3.5
MT 2	1/20.020	0.049951	1°25'50"	17.780	14.583	64	5
MT 3	1/19.922	0.050196	1°26'16"	23.825	19.759	81	5
MT 4	1/19.254	0.051938	1°29'15"	31.267	25.943	102.5	6.5
MT 5	1/19.002	0.052626	1°30'26"	44.399	37.584	129.5	6.5
MT 6	1/19.180	0.052138	1°29'36"	63.348	53.859	182	8
MT 7	1/19.231	0.052000	1°29'22"	83.058	70.058	250	10

Accuracy

(Unit : mm)

Morse taper No.	Dimensional deviation of D	Taper accuracy	Dimensional deviation of L	Dimensional deviation of a
MT 0	0.0045	0.002	0.015	0.1
MT 1	0.0055	0.002	0.015	0.1
MT 2	0.0055	0.002	0.015	0.1
MT 3	0.0065	0.0025	0.020	0.2
MT 4	0.008	0.0025	0.020	0.2
MT 5	0.008	0.003	0.030	0.2
MT 6	0.0095	0.0035	0.030	0.2
MT 7	0.011	0.005	0.030	0.2

Taper Plug Gauges

Basic size

(Unit : mm)

7/24 taper No.	Size of tapered portion					A
	D	d	L	a	C	
NT10	15.875	9.525	21.770	1.6	23.370	36
NT20	22.225	12.700	32.657	1.6	34.257	50
NT25	25.400	13.818	39.711	1.6	41.311	55
NT30	31.750	17.467	48.971	1.6	50.571	55
NT35	38.100	21.431	57.150	1.6	58.750	65
NT40	44.450	25.400	65.316	1.6	66.916	72
NT45	57.150	32.610	84.138	1.6	85.738	90
NT50	69.850	39.676	103.454	3.2	106.654	105
NT55	88.900	50.469	131.763	3.2	134.963	130
NT60	107.950	60.722	161.925	3.2	165.125	160

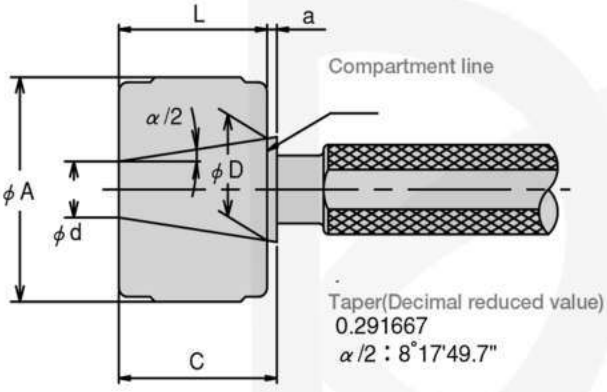

Accuracy

(Unit : mm)

7/24 taper No.	Taper (Decimal reduced value)	Dimensional deviation of D	Taper accuracy	Dimensional deviation of L	Dimensional deviation of a
NT10	0.291667	0.003	0.003	0.005	0.25
NT20	0.291667	0.003	0.003	0.005	0.25
NT25	0.291667	0.003	0.003	0.005	0.25
NT30	0.291667	0.004	0.004	0.010	0.25
NT35	0.291667	0.004	0.004	0.010	0.25
NT40	0.291667	0.004	0.004	0.010	0.25
NT45	0.291667	0.004	0.004	0.010	0.25
NT50	0.291667	0.004	0.004	0.010	0.25
NT55	0.291667	0.004	0.004	0.010	0.25
NT60	0.291667	0.005	0.005	0.010	0.25

Standard Pitch Diameter Chart

NOMINAL SIZE	UNIFIED PITCH DIAMETERS				
	CLASS 2A		CLASS 3A		X TOL. GO =− NO GO =+
	GO	NOT GO	GO	NOT GO	
#0-80 UNF	.0514	.0496	.0519	.0506	.0002
#1-64 UNC	.0623	.0603	.0629	.0614	.0002
#1-72 UNF	.0634	.0615	.0640	.0626	.0002
#2-56 UNC	.0738	.0717	.0744	.0728	.0002
#2-64 UNF	.0753	.0733	.0759	.0744	.0002
#3-48 UNC	.0848	.0825	.0855	.0838	.0002
#3-56 UNF	.0867	.0845	.0874	.0858	.0002
#4-40 UNC	.0950	.0925	.0958	.0939	.0002
#4-48 UNF	.0978	.0954	.0985	.0967	.0002
#5-40 UNC	.1080	.1054	.1088	.1069	.0002
#5-44 UNF	.1095	.1070	.1102	.1083	.0002
#6-32 UNC	.1169	.1141	.1177	.1156	.0003
#6-40 UNF	.1210	.1184	.1218	.1198	.0002
#8-32 UNC	.1428	.1399	.1437	.1415	.0003
#8-36 UNF	.1452	.1424	.1460	.1439	.0002
#10-24 UNC	.1619	.1586	.1629	.1604	.0003
#10-32 UNF	.1688	.1658	.1697	.1674	.0003
#12-24 UNC	.1879	.1845	.1889	.1863	.0003
#12-28 UNF	.1918	.1886	.1928	.1904	.0003
#12-32 UNEF	.1948	.1917	.1957	.1933	.0003
¼-20 UNC	.2164	.2127	.2175	.2147	.0003
¼-28 UNF	.2258	.2225	.2268	.2243	.0003
¼-32 UNEF	.2287	.2255	.2297	.2273	.0003
5/16-18 UNC	.2752	.2712	.2764	.2734	.0003
5/16-24 UNF	.2843	.2806	.2854	.2827	.0003
5/16-32 UNEF	.2912	.2880	.2922	.2898	.0003
⅜-16 UNC	.3331	.3287	.3344	.3311	.0003
⅜-24 UNF	.3468	.3430	.3479	.3450	.0003
⅜-32 UNEF	.3537	.3503	.3547	.3522	.0003
7/16-14 UNC	.3897	.3850	.3911	.3876	.0003
7/16-20 UNF	.4037	.3995	.4050	.4019	.0003
7/16-28 UNEF	.4132	.4096	.4143	.4116	.0003
½-13 UNC	.4485	.4435	.4500	.4463	.0003
½-20 UNF	.4662	.4619	.4675	.4643	.0003
½-28 UNEF	.4757	.4720	.4768	.4740	.0003
9/16-12 UNC	.5068	.5016	.5084	.5045	.0003
9/16-18 UNF	.5250	.5205	.5264	.5230	.0003

NOMINAL SIZE	UNIFIED PITCH DIAMETERS				
	CLASS 2A		CLASS 3A		X TOL. GO =− NO GO =+
	GO	NOT GO	GO	NOT GO	
9/16-24 UNEF	.5342	.5303	.5354	.5325	.0003
⅝-11 UNC	.5644	.5589	.5660	.5619	.0003
⅝-18 UNF	.5875	.5828	.5889	.5854	.0003
⅝-24 UNEF	.5967	.5927	.5979	.5949	.0003
11/16-24 UNEF	.6592	.6552	.6604	.6574	.0003
¾-10 UNC	.6832	.6773	.6850	.6806	.0003
¾-16 UNF	.7079	.7029	.7094	.7056	.0003
¾-20 UNEF	.7162	.7118	.7175	.7142	.0003
13/16-20 UNEF	.7787	.7743	.7800	.7767	.0003
⅞-9 UNC	.8009	.7946	.8028	.7981	.0003
⅞-14 UNF	.8270	.8216	.8286	.8245	.0003
⅞-20 UNEF	.8412	.8368	.8425	.8392	.0003
15/16-20 UNEF	.9036	.8991	.9050	.9016	.0003
1"-8 UNC	.9168	.9100	.9188	.9137	.0004
1"-12 UNF	.9441	.9382	.9459	.9415	.0003
1"-14 UNS	.9519	.9463	.9536	.9494	.0003
1"-20 UNEF	.9661	.9616	.9675	.9641	.0003
1 1/16-12 UN	1.0067	1.0010	1.0084	1.0042	.0003
1 1/16-18 UNEF	1.0250	1.0203	1.0264	1.0228	.0003
1⅛-7 UNC	1.0300	1.0228	1.0322	1.0268	.0004
1⅛-12 UNF	1.0691	1.0631	1.0709	1.0664	.0003
1⅛-18 UNEF	1.0875	1.0828	1.0889	1.0853	.0003
1 3/16-12 UN	1.1317	1.1259	1.1334	1.1291	.0003
1 3/16-18 UNEF	1.1499	1.1450	1.1514	1.1478	.0003
1¼-7 UNC	1.1550	1.1476	1.1572	1.1517	.0004
1¼-12 UNF	1.1941	1.1879	1.1959	1.1913	.0003
1¼-18 UNEF	1.2124	1.2075	1.2139	1.2103	.0003
1 5/16-12 UN	1.2567	1.2509	1.2584	1.2541	.0003
1 5/16-18 UNEF	1.2749	1.2700	1.2764	1.2728	.0003
1⅜-6 UNC	1.2643	1.2563	1.2667	1.2607	.0004
1⅜-12 UNF	1.3190	1.3127	1.3209	1.3162	.0003
1⅜-18 UNEF	1.3374	1.3325	1.3389	1.3353	.0003
1 7/16-12 UN	1.3816	1.3757	1.3834	1.3790	.0003
1 7/16-18 UNEF	1.3999	1.3949	1.4014	1.3977	.0003
1½-6 UNC	1.3893	1.3812	1.3917	1.3856	.0004
1½-12 UNF	1.4440	1.4376	1.4459	1.4411	.0003
1½-18 UNEF	1.4624	1.4574	1.4639	1.4602	.0003

Spline Gauges

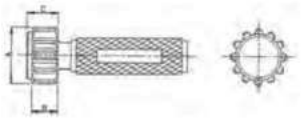

60 plug

A From	A to	B	C
Up to	8 mm	6	10
Ø 8	Ø 12	8	12
Ø 12	Ø 18	12	17
Ø 18	Ø 28	16	21
Ø 28	Ø 38	22	27
Ø 38	Ø 48	28	36
Ø 48	Ø 70	30	38
Ø 70	Ø 120	40	48
Ø 120	Ø 220	50	58

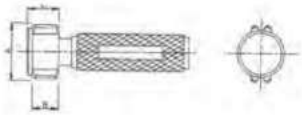

N060 plug

A From	A to	B	C
Up to	8 mm	4	8
Ø 8	Ø 12	6	10
Ø 12	Ø 18	8	13
Ø 18	Ø 28	10	15
Ø 28	Ø 38	12	18
Ø 38	Ø 48	14	22
Ø 48	Ø 70	15	23
Ø 70	Ø 120	20	28
Ø 120	Ø 220	25	33

Spline Ring Gauges

60 ring

A From	A To	B	C
Up to 12 mm		45	10
Ø 12	Ø 18	53	16
Ø 18	Ø 28	63	22
Ø 28	Ø 36	71	25
Ø 36	Ø 50	85	25
Ø 50	Ø 60	100	30
Ø 60	Ø 70	112	35
Ø 70	Ø 80	125	35
Ø 80	Ø 90	140	35
Ø 90	Ø 100	150	35
Ø 100	Ø 120	170	40
Ø 120	Ø 140	190	45
Ø 140	Ø 160	210	50
Ø 160	Ø 180	230	50
Ø 180	Ø 200	250	50
Ø 200	Ø 220	280	50

N060 ring

A From	A To	B	C
Up to 12 mm		45	8
Ø 12	Ø 18	53	11
Ø 18	Ø 28	63	14
Ø 28	Ø 36	71	16
Ø 36	Ø 50	85	16
Ø 50	Ø 60	100	20
Ø 60	Ø 70	112	20
Ø 70	Ø 80	125	23
Ø 80	Ø 90	140	23
Ø 90	Ø 100	150	23
Ø 100	Ø 120	170	25
Ø 120	Ø 140	190	25
Ø 140	Ø 160	210	30
Ø 160	Ø 180	230	30
Ø 180	Ø 200	250	30
Ø 200	Ø 220	280	30

Plain Ring Setting Gauges

A		B	C
From	To	mini	
Ø 1	Ø 2,5	4	22
Ø 2,5	Ø 5	5	22
Ø 5	Ø 10	8	32
Ø 10	Ø 15	10	38
Ø 15	Ø 20	12	45
Ø 20	Ø 25	14	53
Ø 25	Ø 32	16	63
Ø 32	Ø 40	18	71
Ø 40	Ø 50	20	85
Ø 50	Ø 60	20	100

A		B	C
From	To	mini	
Ø 60	Ø 70	24	112
Ø 70	Ø 80	24	125
Ø 80	Ø 90	24	140
Ø 90	Ø 100	24	160
Ø 100	Ø 110	28	170
Ø 110	Ø 120	28	180
Ø 120	Ø 130	28	190
Ø 130	Ø 140	28	200
Ø 140	Ø 150	28	212
Ø 150	Ø 160	28	224

Thread Plug Gauges

NOMINAL SIZE	GO BASIC ALL CLASSES ALL SERIES	UNIFIED PITCH DIAMETERS				
		NOT GO		X TOL. GO =+ NO GO =−	X LEAD TOL.	X ± HALF ANGLE TOL.
		CLASS 2B	CLASS 3B			
#0-80 UNF	.0519	.0542	.0536	.0002	.0002	0°30'
#1-64 UNC	.0629	.0655	.0648	.0002	.0002	0°30'
#1-72 UNF	.0640	.0665	.0659	.0002	.0002	0°30'
#2-56 UNC	.0744	.0772	.0765	.0002	.0002	0°30'
#2-64 UNF	.0759	.0786	.0779	.0002	.0002	0°30'
#3-48 UNC	.0855	.0885	.0877	.0002	.0002	0°30'
#3-56 UNF	.0874	.0902	.0895	.0002	.0002	0°30'
#4-40 UNC	.0958	.0991	.0982	.0002	.0002	0°20'
#4-48 UNF	.0985	.1016	.1008	.0002	.0002	0°30'
#5-40 UNC	.1088	.1121	.1113	.0002	.0002	0°20'
#5-44 UNF	.1102	.1134	.1126	.0002	.0002	0°20'
#6-32 UNC	.1177	.1214	.1204	.0003	.0003	0°15'
#6-40 UNF	.1218	.1252	.1243	.0002	.0002	0°20'
#8-32 UNC	.1437	.1475	.1465	.0003	.0003	0°15'
#8-36 UNF	.1460	.1496	.1487	.0002	.0002	0°20'
#10-24 UNC	.1629	.1672	.1661	.0003	.0003	0°15'
#10-32 UNF	.1697	.1736	.1726	.0003	.0003	0°15'
#12-24 UNC	.1889	.1933	.1922	.0003	.0003	0°15'
#12-28 UNF	.1928	.1970	.1959	.0003	.0003	0°15'
#12-32 UNEF	.1957	.1998	.1988	.0003	.0003	0°15'
¼-20 UNC	.2175	.2224	.2211	.0003	.0003	0°15'
¼-28 UNF	.2268	.2311	.2300	.0003	.0003	0°15'
¼-32 UNEF	.2297	.2339	.2328	.0003	.0003	0°15'
5/16-18 UNC	.2764	.2817	.2803	.0003	.0003	0°10'
5/16-24 UNF	.2854	.2902	.2890	.0003	.0003	0°15'
5/16-32 UNEF	.2922	.2964	.2953	.0003	.0003	0°15'
⅜-16 UNC	.3344	.3401	.3387	.0003	.0003	0°10'
⅜-24 UNF	.3479	.3528	.3516	.0003	.0003	0°15'
⅜-32 UNEF	.3547	.3591	.3580	.0003	.0003	0°15'
7/16-14 UNC	.3911	.3972	.3957	.0003	.0003	0°10'
7/16-20 UNF	.4050	.4104	.4091	.0003	.0003	0°15'
7/16-28 UNEF	.4143	.4189	.4178	.0003	.0003	0°15'
½-13 UNC	.4500	.4565	.4548	.0003	.0003	0°10'
½-20 UNF	.4675	.4731	.4717	.0003	.0003	0°15'
½-28 UNEF	.4768	.4816	.4804	.0003	.0003	0°15'
9/16-12 UNC	.5084	.5152	.5135	.0003	.0003	0°10'
9/16-18 UNF	.5264	.5323	.5308	.0003	.0003	0°10'

NOMINAL SIZE	GO BASIC ALL CLASSES ALL SERIES	UNIFIED PITCH DIAMETERS				
		NOT GO		X TOL. GO =+ NO GO =−	X LEAD TOL.	X ± HALF ANGLE TOL.
		CLASS 2B	CLASS 3B			
9/16-24 UNEF	.5354	.5405	.5392	.0003	.0003	0°15'
⅝-11 UNC	.5660	.5732	.5714	.0003	.0003	0°10'
⅝-18 UNF	.5889	.5949	.5934	.0003	.0003	0°10'
⅝-24 UNEF	.5979	.6031	.6018	.0003	.0003	0°15'
11/16-24 UNEF	.6604	.6656	.6643	.0003	.0003	0°15'
¾-10 UNC	.6850	.6927	.6907	.0003	.0003	0°10'
¾-16 UNF	.7094	.7159	.7143	.0003	.0003	0°10'
¾-20 UNEF	.7175	.7232	.7218	.0003	.0003	0°15'
13/16-20 UNEF	.7800	.7857	.7843	.0003	.0003	0°15'
⅞-9 UNC	.8028	.8110	.8089	.0003	.0003	0°10'
⅞-14 UNF	.8286	.8356	.8339	.0003	.0003	0°10'
⅞-20 UNEF	.8425	.8482	.8468	.0003	.0003	0°15'
15/16-20 UNEF	.9050	.9109	.9094	.0003	.0003	0°15'
1"-8 UNC	.9188	.9276	.9254	.0004	.0004	0°05'
1"-12 UNF	.9459	.9535	.9516	.0003	.0003	0°10'
1"-14 UNS	.9536	.9609	.9590	.0003	.0003	0°10'
1"-20 UNEF	.9675	.9734	.9719	.0003	.0003	0°15'
1 1/16-12 UN	1.0084	1.0158	1.0139	.0003	.0003	0°10'
1 1/16-18 UNEF	1.0264	1.0326	1.0310	.0003	.0003	0°10'
1⅛-7 UNC	1.0322	1.0416	1.0393	.0004	.0004	0°05'
1⅛-12 UNF	1.0709	1.0787	1.0768	.0003	.0003	0°10'
1⅛-18 UNEF	1.0889	1.0951	1.0935	.0003	.0003	0°10'
1 3/16-12 UN	1.1334	1.1409	1.1390	.0003	.0003	0°10'
1 3/16-18 UNEF	1.1514	1.1577	1.1561	.0003	.0003	0°10'
1¼-7 UNC	1.1572	1.1668	1.1644	.0004	.0004	0°05'
1¼-12 UNF	1.1959	1.2039	1.2019	.0003	.0003	0°10'
1¼-18 UNEF	1.2139	1.2202	1.2186	.0003	.0003	0°10'
1 5/16-12 UN	1.2584	1.2659	1.2640	.0003	.0003	0°10'
1 5/16-18 UNEF	1.2764	1.2827	1.2811	.0003	.0003	0°10'
1⅜-6 UNC	1.2667	1.2771	1.2745	.0004	.0004	0°05'
1⅜-12 UNF	1.3209	1.3291	1.3270	.0003	.0003	0°10'
1⅜-18 UNEF	1.3389	1.3452	1.3436	.0003	.0003	0°10'
1 7/16-12 UN	1.3834	1.3910	1.3891	.0003	.0003	0°10'
1 7/16-18 UNEF	1.4014	1.4079	1.4062	.0003	.0003	0°10'
1½-6 UNC	1.3917	1.4022	1.3996	.0004	.0004	0°05'
1½-12 UNF	1.4459	1.4542	1.4522	.0003	.0003	0°10'
1½-18 UNEF	1.4639	1.4704	1.4687	.0003	.0003	0°10'

Master Setting Ring Gauges

Nominal Diameter Range (mm)	Size Tolerance (mm)	Roundess & Parallelism
1-3	±0.0015	0.0003
3-6	±0.002	0.0004
6-10	±0.002	0.0004
10-18	±0.0025	0.0005
18-30	±0.003	0.0006
30-50	±0.0035	0.0007
50-80	±0.004	0.0008
80-120	±0.005	0.001
120-180	±0.006	0.0012
180-250	±0.007	0.0014
250-315	±0.008	0.0016

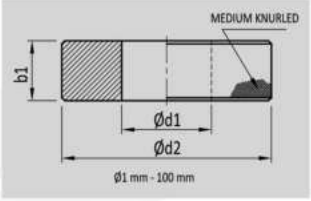

ød1			
ABOVE	UPTO & INC.	ød2	b1
1.5	2.5	22	4
2.5	5.0	22	5
5.0	10.0	32	8
10.0	15.0	38	10
15.0	20.0	45	12
20.0	25.0	53	14
25.0	32.0	63	16
32.0	40.0	71	18
40.0	50.0	85	20
50.0	60.0	100	20
60.0	70.0	112	24
70.0	80.0	125	24
80.0	90.0	140	24
90.0	100.0	160	24

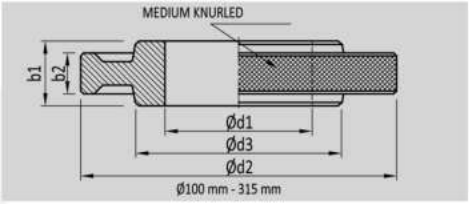

ød1		ød2	ød3	THICKNESS	
ABOVE	UPTO & INC.			b1	b2
100.0	110.0	170	132	28	14
110.0	120.0	180	140	28	16
120.0	130.0	190	150	28	16
130.0	140.0	200	160	28	18
140.0	150.0	212	170	28	18
150.0	160.0	224	180	28	20
160.0	170.0	236	190	32	20
170.0	180.0	250	200	32	20
180.0	190.0	265	212	32	22
190.0	200.0	280	224	32	22
200.0	212.0	300	236	32	22
212.0	224.0	315	250	32	25
224.0	236.0	335	265	36	25
236.0	250.0	355	280	36	28
250.0	265.0	375	300	36	28
265.0	280.0	400	315	36	28
280.0	300.0	425	335	36	32
300.0	315.0	450	355	36	32

Adjustable Snap Gauges

CMRA	A From	A To
1	Ø 0	Ø 13
2	Ø 13	Ø 25
3	Ø 25	Ø 38
4	Ø 38	Ø 51
5	Ø 51	Ø 64
6	Ø 64	Ø 76
7	Ø 76	Ø 95
8	Ø 95	Ø 114
9	Ø 114	Ø 133
10	Ø 133	Ø 152
11	Ø 152	Ø 178
12	Ø 178	Ø 203
13	Ø 203	Ø 229
14	Ø 229	Ø 254
15	Ø 254	Ø 279
16	Ø 279	Ø 305

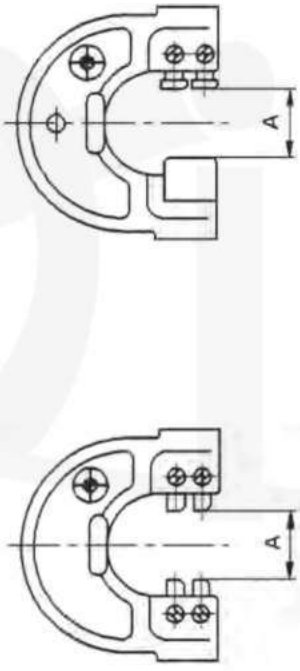

CMRA

CMRC	A From	A to
1	Ø 0	Ø 6
2	Ø 6	Ø13
3	Ø 13	Ø 19
4	Ø 19	Ø 26
5	Ø 26	Ø 32
6	Ø 32	Ø 38
7	Ø 38	Ø 44
8	Ø 44	Ø 51
9	Ø 51	Ø 57
10	Ø 57	Ø 64
11	Ø 64	Ø 70
12	Ø 70	Ø 78
13	Ø 78	Ø 87
14	Ø 87	Ø 97
15	Ø 97	Ø 106
16	Ø 106	Ø 117
17	Ø 117	Ø 125
18	Ø 125	Ø 135
19	Ø 135	Ø 144
20	Ø 144	Ø 155
Possible up to		Ø 295

A -Type Adjustable Snap Gauges

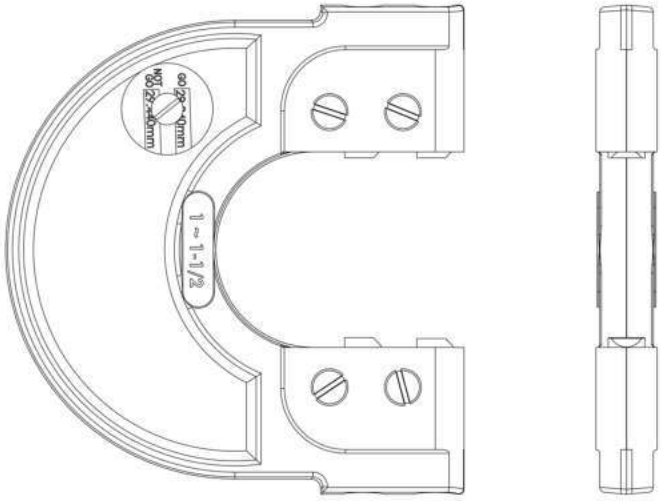

Frame Size	inch	mm
1	0 ~ 1/2	0 ~ 13
2	1/2 ~ 1	13 ~ 25
3	1 ~ 1-1/2	25 ~ 38
4	1-1/2 ~ 2	38 ~ 51
5	2 ~ 2-1/2	51 ~ 64
6	2-1/2 ~ 3	64 ~ 76
7	3 ~ 3-3/4	76 ~ 95
8	3-3/4 ~ 4-1/2	95 ~ 114
9	4-1/2 ~ 5-1/4	114 ~ 133
10	5-1/4 ~ 6	133 ~ 152
11	6 ~ 7	152 ~ 178
12	7 ~ 8	178 ~ 203
13	8 ~ 9	203 ~ 229

C-Type Snap Gauges

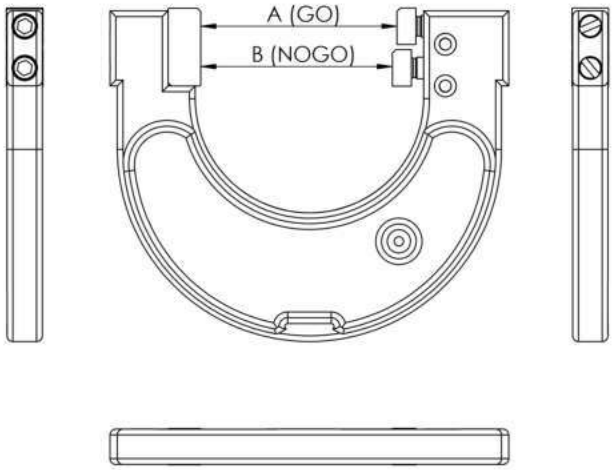

Frame Size	Range		Frame Size	Range
1			7x	78 - 87
1x	0 - 6		8	87 - 97
2	6 - 13		8x	97 - 106
2x	13 - 19		9	106 - 116
3	19 - 26		9x	116 - 125
3x	26 - 32		10	125 - 135
4	32 - 38		10x	135 - 144
4x	38 - 44		11	144 - 156
5	44 - 51		11x	156 - 168
5x	51 - 57		12	168 - 181
6	57 - 64		12x	181 - 194
6x	64 - 70		13	194 - 206
7	70 - 78		13x	206 - 219

U-Type Snap Gauges

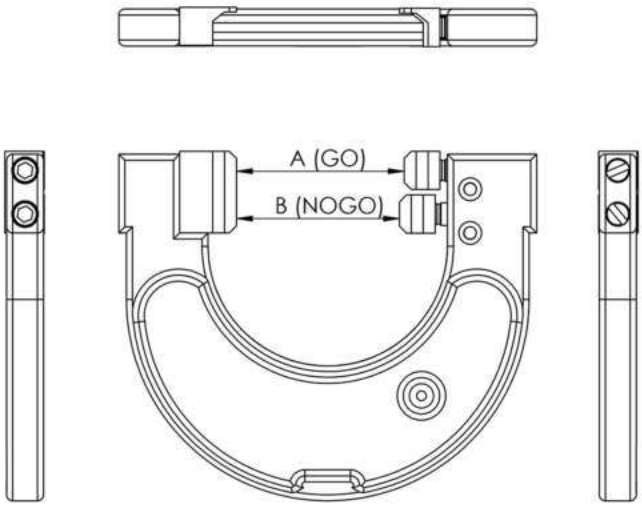

Frame Size	Range		Frame Size	Range
			7x	67 - 76
			8	76 - 86
			8x	86 - 95
2x	0 - 6		9	95 - 105
3	6 - 13		9x	105 - 114
3x	13 - 19		10	114 - 124
4	19 - 26		10x	124 - 133
4x	26 - 32		11	133 - 146
5	32 - 38		11x	146 - 159
5x	38 - 44		12	159 - 171
6	44 - 51		12x	171 - 184
6x	51 - 67		13	184 - 197
7	67 - 76		13x	197 - 210

Snap Gauges for Undercuts

A From	A To	B
Ø 3	Ø 18	3
Ø 18	Ø 70	4
Ø 70	Ø 100	5
Ø 100	Ø 130	5
Ø 130	Ø 150	6
Ø 150	Ø 200	6
Ø 200	Ø 250	6

A From	A To	B
Ø 250	Ø 300	6
Ø 300	Ø 350	6
Ø 350	Ø 400	7
Ø 400	Ø 500	7
Ø 500	Ø 650	8
Ø 650	Ø 800	8

Type of anvils	A	B	C	D	F	G	H	I	J	K
Form or profile of anvils	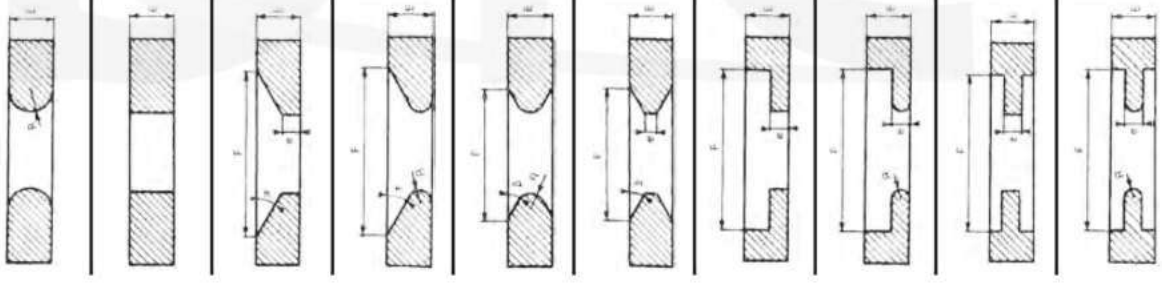									

Doubled Ended Snap Gauges

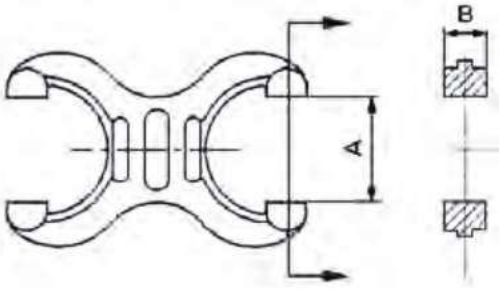

A From	A to	B
Ø 3	Ø 6	6,5
Ø 6	Ø 10	7,5
Ø 10	Ø 14	7,5
Ø 14	Ø 18	8
Ø 18	Ø 21	8
Ø 21	Ø 27	8
Ø 27	Ø 32	9
Ø 32	Ø 38	9
Ø 38	Ø 43	10

A From	A to	B
Ø 43	Ø 49	10
Ø 49	Ø 56	10
Ø 56	Ø 63	11,5
Ø 63	Ø 70	11,5
Ø 70	Ø 77	12
Ø 77	Ø 84	15
Ø 84	Ø 92	15
Ø 92	Ø 100	15

Metric Trapezoidal Thread Gauges

Nominal Dia.	Pitch 1	Pitch 2	Pitch 3	Nominal Dia.	Pitch 1	Pitch 2	Pitch 3
Tr8	1.5			Tr42	3	7	10
Tr9	1.5	2		Tr44	3	7	12
Tr10	1.5	2		Tr46	3	8	12
Tr11	2	3		Tr48	3	8	12
Tr12	2	3		Tr50	3	8	12
Tr14	2	3		Tr52	3	8	12
Tr16	2	4		Tr55	3	9	14
Tr18	2	4		Tr60	3	9	14
Tr20	2	4		Tr65	4	10	16
Tr22	3	5	8	Tr70	4	10	16
Tr24	3	5	8	Tr75	4	10	16
Tr26	3	5	8	Tr80	4	10	16
Tr28	3	5	8	Tr85	4	12	18
Tr30	3	6	10	Tr90	4	12	18
Tr32	3	6	10	Tr95	4	12	18
Tr34	3	6	10	Tr100	4	12	20
Tr36	3	6	10	Tr110	4	12	20
Tr38	3	7	10	Tr120	6	14	22
Tr40	3	7	10	Tr300	12	24	44

Individual & Boxed Slips

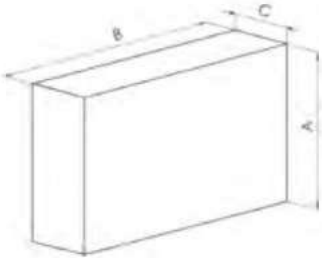

Measurement A in mm	In Increments of	Section B x C in mm	Steel class				Carbide class				Ceramic class			
			0	1	2	K	0	1	2	K	0	1	2	K
0.5		30 x 9	X	X	X		•	•	•					
0,51 - 0,99	0.01	30 x 9					•	•	•					
0,991 - 0,999	0.001	30 x 9					•	•	•					
1.0005		30 x 9	X	X	X		•	•	•					
1,001 - 1,009	0.001	30 x 9	X	X	X		•	•	•					
1,00 - 1,49	0.01	30 x 9	X	X	X		•	•	•					
1,50 - 1,9	0.1	30 x 9	X	X	X		•	•	•					
2		30 x 9	X	X	X		•	•	•					
2,50 - 10	0.5	30 x 9	X	X	X		•	•	•					
10 - 25	0.5	35 x 9												
30,00 - 100,00	10	35 x 9	X	X	X		•	•	•					
125,00 - 250,00	25	35 x 9	X	X	X									
300 - 1000	100	35 x 9	X	X	X									

Measuring Pins

A From	A To	B	C	D	G	H
Ø 0.1	Ø 0.99	30	40	25	10	11,55
Ø 1	Ø 4	60	70	25	10	11,55
Ø 4.01	Ø 8	60	70	25	14	16,17
Ø 8.01	Ø 16	60	70	25	18	20,78
Ø 16.01	Ø 20	60	70	20	-	Ø 26

A From	A To	B	C	D	G	H
Ø 0.1	Ø 0.99	30	40	25	10	11,55
Ø 1	Ø 4	60	70	25	10	11,55
Ø 4.01	Ø 8	60	70	25	14	16,17
Ø 8.01	Ø 16	60	70	25	18	20,78
Ø 16.01	Ø 20	60	70	20	-	Ø 26

Boxed Measuring Pin Sets

A Ø d		I	D	LG	L
Ø 0.10	Ø 0.30	2	4	32	34
Ø 0.30	Ø 0.50	3.5	4	32	35.5
Ø 0.5	Ø 1.00	5	4	32	37

Short length Pins

DATA SHEET

'S' STYLE

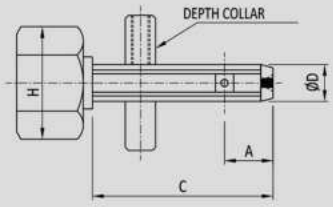

ø D mm	A THROUGH	A BLIND	C THROUGH	C BLIND	F**	G*	H	MIN RANGE	MAX RANGE
1.5-3.0 #	4.00	-	16.0	-	2.50	-	7.0	±0.005	±0.015
3.0-4.0	6.50	3.0	24.0	20.5	2.50	4.0	18.5		
4.0-6.0	9.00	3.0	31.0	25.0	2.50	4.0	18.5		

'M' STYLE

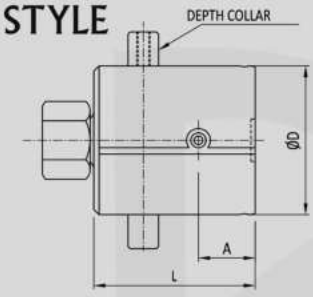

ø D mm	A THROUGH	A BLIND	L	F** MOD1A/CL	G* MOD1A/CL	MIN RANGE	MAX RANGE
6.0-13.0	13.0	4.0	38	4.5/3.5	6.5/6.0	±0.005	±0.030
13.0-20.0	15.0	4.5	40				
20.0-35.0							
35.0-60.0							

'L' STYLE

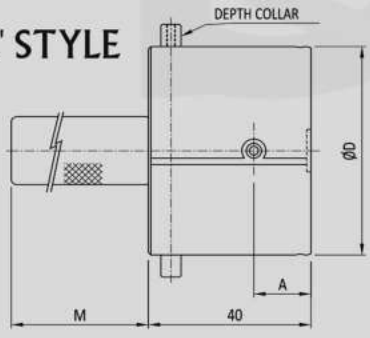

ø D mm	A THROUGH	A BLIND	F** MOD1A/CL	G* MOD1A/CL	M	MIN RANGE	MAX RANGE
60.0-100.0	15.0	4.5	4.5/3.5	6.5/6.0	100.00	±0.005	±0.030
100.0-150.0#					150.00	±0.010	
150.0-200.0#					200.00	±0.015	±0.060

Air Ring Gauges & Setting Plug

AIR RING GAUGE DATA SHEET

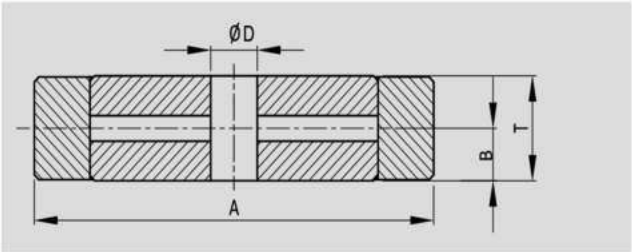

ø D mm	A	T	B	E	F	MIN RANGE	MAX RANGE
2.0 - 3.0	35.0	9.0	4.5	6.6	2.5	±0.005	80% OF SCALE
3.0 - 6.0	35.0	9.0	4.5	6.6	2.5	±0.005	

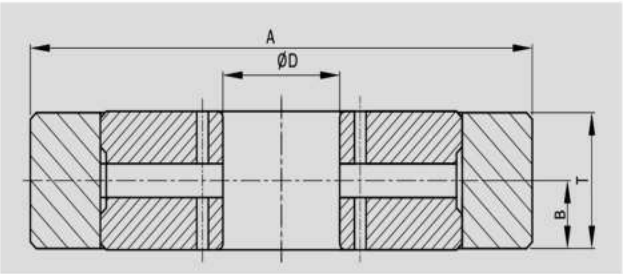

ø D mm	A	T	B	B1	E (OFFSET) MOD 1A/ CL	F (CENTRAL) MOD 1A/ CL	MIN RANGE	MAX RANGE
6.0-20.0	60.0	20.0	10.0	4.5	6.5/5.5	4.5/3.5	±0.005	80% OF SCALE
20.0-40.0	86.0						±0.010	
40.0-65.0	120.0						±0.015	
65.0-100.0	154.0						±0.020	
100.0-120.0	184.0						±0.020	
120.0-150.0	225.0						±0.020	

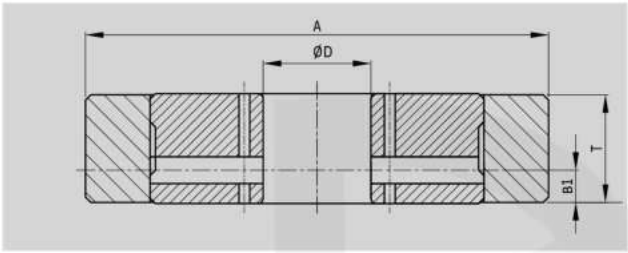

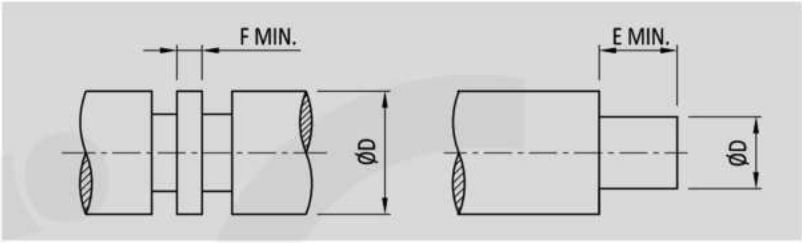

SETTING PLUGS DATA SHEET

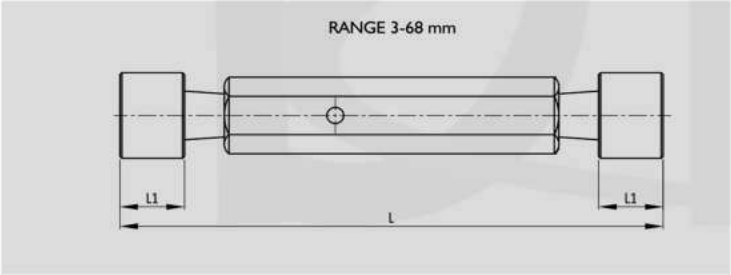

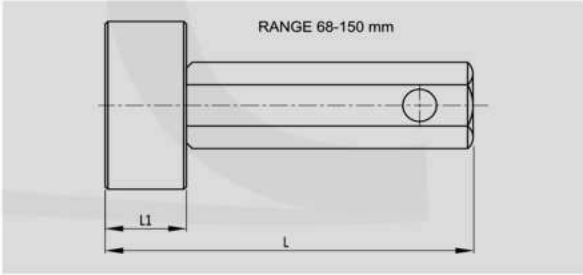

DIA RANGE	L	L1
3.0-6.0	75.0	8.0
6.0-10.0	110.0	20.0
10.0-14.0	119.0	
14.0-18.0	130.0	
18.0-24.0	144.0	
24.0-30.0	128.0	
30.0-40.0	160.0	
40.0-65.0	160.0	
65.0-68.0	160.0	

DIA RANGE	L	L1
68.0- 150.0	175.0	25.0

Note: For diameter below 3 mm pin type & collet design are applicable.

Master Setting Disc

RANGE: 3 - 200 mm

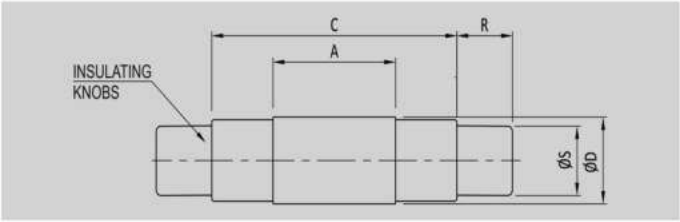

ØD		A	C	R	ØS
ABOVE	UPTO & INCLUDING				
3.0	3.81	9.52	17.46	11.1	2.4
3.81	5.84	11.11	19.05	11.1	3.2
5.84	9.27	12.7	20.64	11.1	5.6

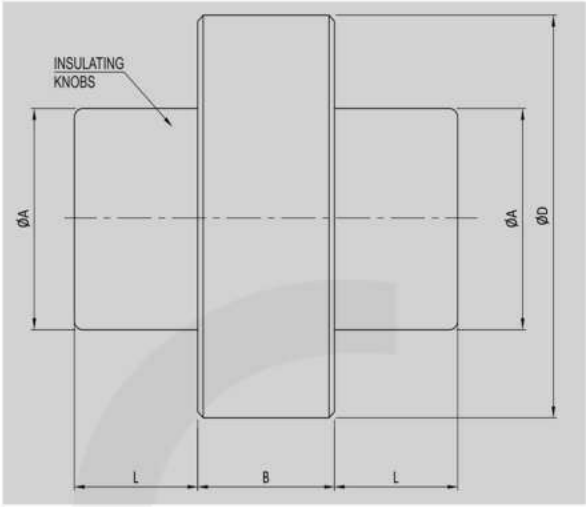

ØD		B	ØA	L
ABOVE	UPTO & INCLUDING			
38.35	51.05	22.2	31.8	15.8
51.05	63.75	22.2	31.8	15.8
63.75	76.45	25.4	38.1	39.8
76.45	89.15	25.4	38.1	39.8
89.15	101.85	25.4	38.1	39.8
101.85	114.55	25.4	38.1	39.8
114.55	127.25	25.4	38.1	39.8
127.25	139.95	25.4	38.1	39.8
139.95	152.65	25.4	38.1	39.8
152.65	165.35	25.4	38.1	39.8
165.35	178.05	25.4	38.1	39.8
178.05	190.75	25.4	38.1	39.8
190.75	200.00	25.4	38.1	39.8

Above 200 mm upto 300 mm on request

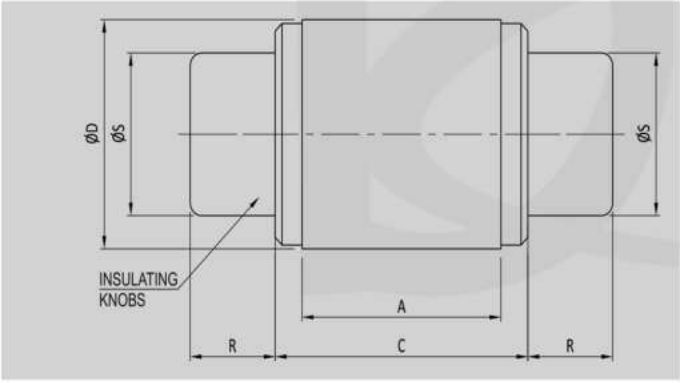

ØD		A	C	R	ØS
ABOVE	UPTO & INCLUDING				
9.27	12.95	14.29	22.22	12.7	8.7
12.95	20.96	15.88	23.81	12.7	12.7
20.96	28.83	17.46	25.4	15.9	19
28.83	38.35	20.64	28.58	15.9	25.4

Nominal Diameter Range (mm)	Size Tolerance (mm)	Roundness & Parallelism
3-20.96	±0.0008	0.0005
20.96-38.35	±0.0011	0.0007
38.35-63.75	±0.0015	0.0010
63.75-114.55	±0.0019	0.0012
114.55-165.35	±0.0024	0.0016
165.35-200	±0.0030	0.0020

Taper Mandrels

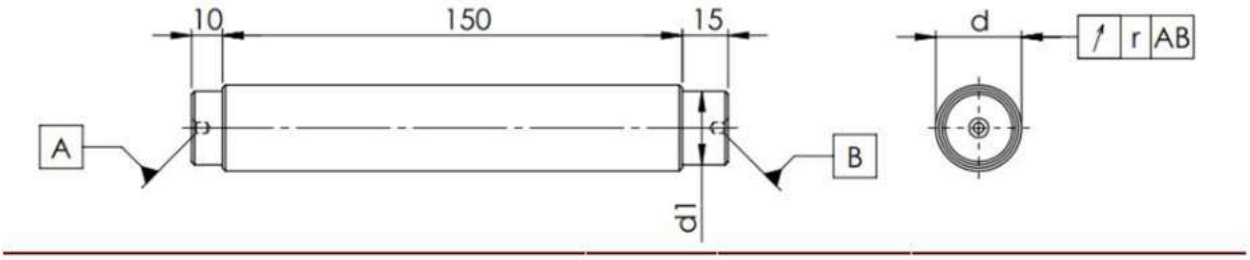

NOMINAL DIA (d) in mm				
FROM	UP TO & INCLUDING	d1	r	TAPER IN 'mm'
-	3	2.5		
3	4	2.8		
4	6	3.7		
6	8	5.7	0.003	
8	10	7.5		
10	14	9		
14	18	13		0.04 To 0.05
18	22	16		
22	26	20		
26	30	2		
30	34	28	0.004	
34	38	28		
38	42	36		
42	50	36		

DIC - INDIA
DEDICATED IMPEX CO.

D - 189, Industrial Focal Point, Patiala
147003 Punjab, India
info@dictoolsindia.com
+91-95922-28222

DiC TOOLS

A Brand by Dedicated Impex Co.